Systec Mediaprep-45 / Mediaprep-65

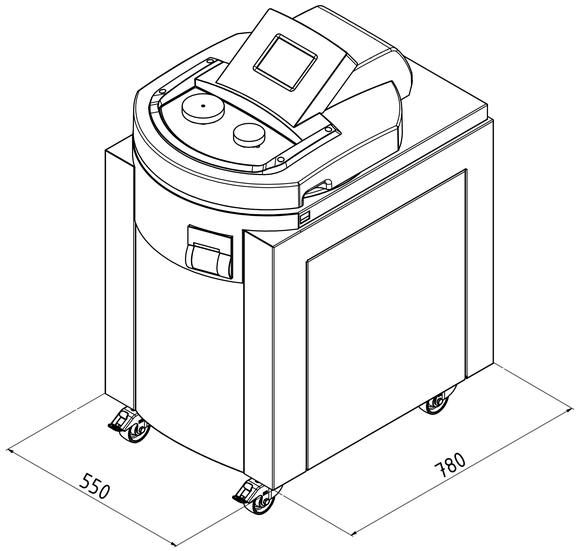

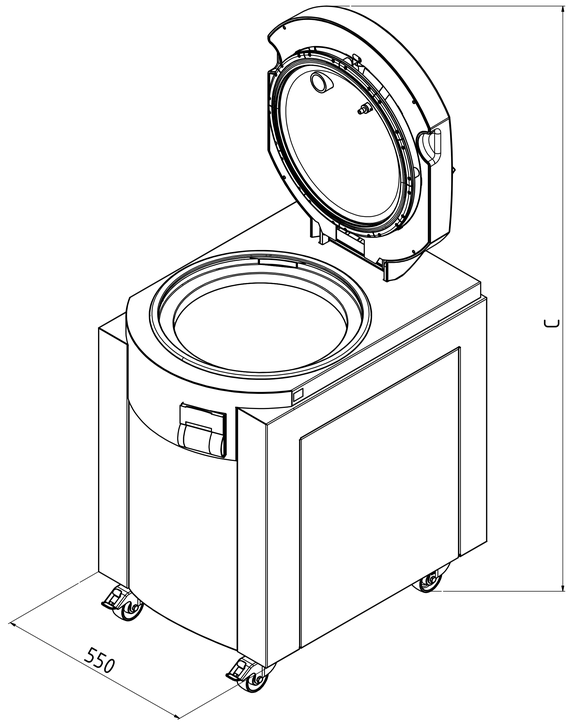

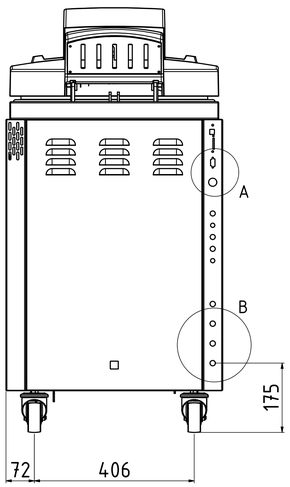

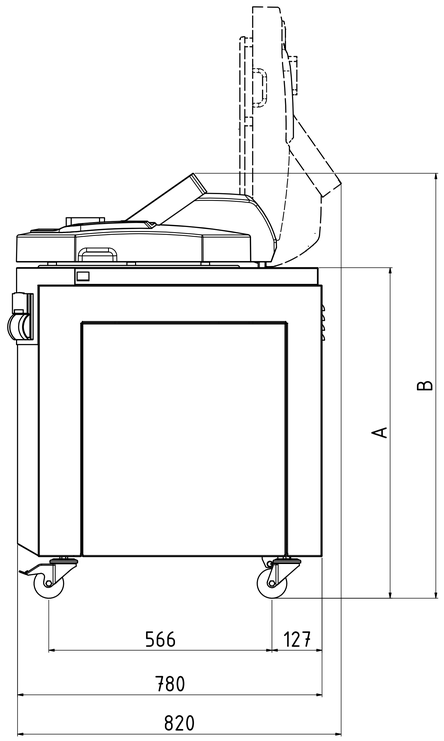

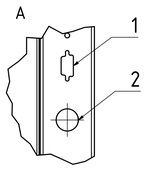

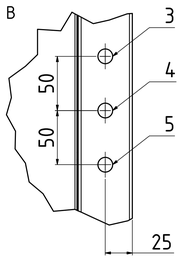

Technical data				
No.	Description	Size	Mediaprep	Comments
1	Interface		X	RS-232 (Ethernet Netzwerk and USB compatible)
2	Power supply*		X	3x400V+N+PE / 32Ampere / CEE socket
3	Demineralized water*[3]	Quick-release coupling	X	3/4 external thread on site, ≥ 1bar water pressure Σ alkaline earth ions < 0,02 mmol/l,condictivity 0,1 - 15 µS/cm
4	Tab water*[3]	Quick-release coupling	X	3/4 external thread on site, ≥ 1bar water pressure Σ alkaline earth ions ≤ 2,0 mmol/l, conductivity max. 300 µS/cm, 11°dH, 200mg/l CaCO3
5	Drain	Quick-release coupling	X	Temperature-resistant installation (103°C in case of failure) Temperature controlled at 70°C (setable)

	Art.No.	A	B	C	Heat emission	Net weight	Test weight*[2]
Systec Mediaprep-45	1745	840	1080	1500	< 700 Watt/h	165 kg	230 kg
Systec Mediaprep-65	1765	970	1210	1630	< 700 Watt/h	185 kg	275 kg

X = Standard O = Optional -- = Not Available Lenght dimensions in mm

* Other voltages available on request

*[2] Test weight: Chamber completely filles with water for pressure test

*[3] The included hose is required 3/4" external thread on site

					Allgemein-toleranz ISO 2768 T1-m	Oberfläche	Maßstab:		Gewicht:
							Werkstoff: Bemerkung:		
						Datum	Name		
					Gezeichnet	28.10.2014	Zilske	Systec Mediaprep-45 / Mediaprep-65	
					Kontrolliert				
					Norm				
					Systec the autoclave company			Zng.-Nr.: AZ 1745 EN	Rev.: 0
Status	Änderungen:	Datum	Name						1 / A0