Systec D-45

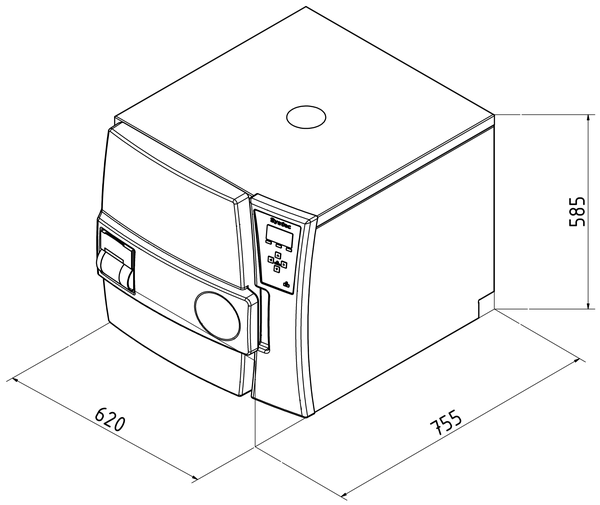

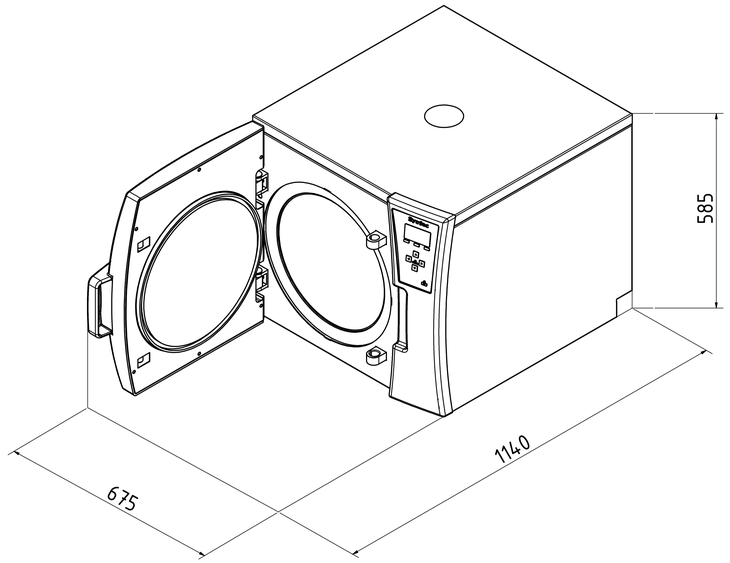

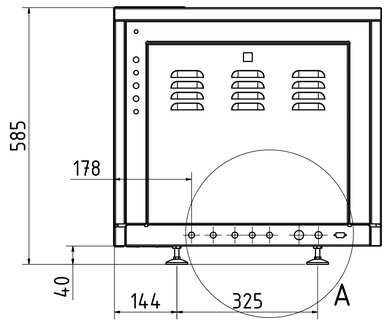

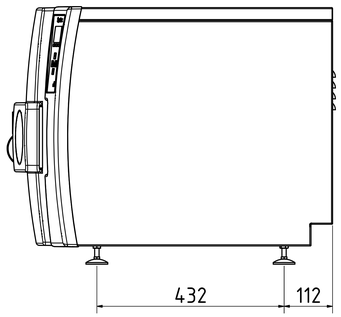

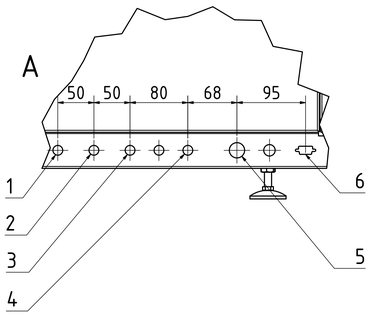

Technical data						
No.	Description	Size	DX	DE	DB	Comments
1	Tap water*	3/4" ET	X	X	--	≥ 1bar water pressure Σ alkaline earth ions ≤ 2,0 mmol/l, conductivity max. 300 µS/cm, 11°dH, 200mg/l CaCO3
2	Demineralized water*	3/4" ET	X	X	--	≥ 1bar water pressure Σ alkaline earth ions < 0,02 mmol/l, conductivity: 0,1 - 15 µS/cm
3	Compressed air	NW 7,2	O	O	--	min. 3-10bar / 50l/min., ≤ Class 4 according to DIN ISO 8573, Only with "water cooling with support pressure"
4	Drain	3/4" ET	X	X	X	Systec DX and Systec DE Temperature-resistant installation (103°C in case of failure) Temperature is controlled at 70°C (setable), Drain height max. ≤ 40cm above the floor Systec DB Temperature-resistant installation up to 103°C No controlled temperature, Drain height max. ≤ 40cm above the floor
5	Power supply*[2]		X	X	X	1x230V+N+PE / 50/60Hz / 16 Ampere / CEE 7/4 socket, Type F
6	Interface		X	X	--	RS-232 / RS-485 (Ethernet network and USB compatible)

	Art.No.: DX	Art.No.: DE	Art.No.: DB	Heat emission	Net weight	Test weight*[3]
Systec D-45	1945	1545	1910	<400 Watt/h	105 kg	150 kg

X = Standard O = Optional -- = Not Available Length dimensions in mm

* Other media connections available on request

*[2] Other voltages available on request

*[3] Test weight: chamber completely filled with water for pressure test

Contact area of the feet: 1963.5mm² per foot - Total 7854mm² for 4 pieces (Ø50mm)

Allgemein-toleranz ISO 2768 T1-m	Oberfläche	Maßstab:	Gewicht:
		Werkstoff: Bemerkung:	
Gezeichnet 13.05.2014 Kotzbke		Systec D-45	
Systec the autoclave company		Zng.-Nr.: AZ 1945 EN	Rev.: 1
			1 / A0